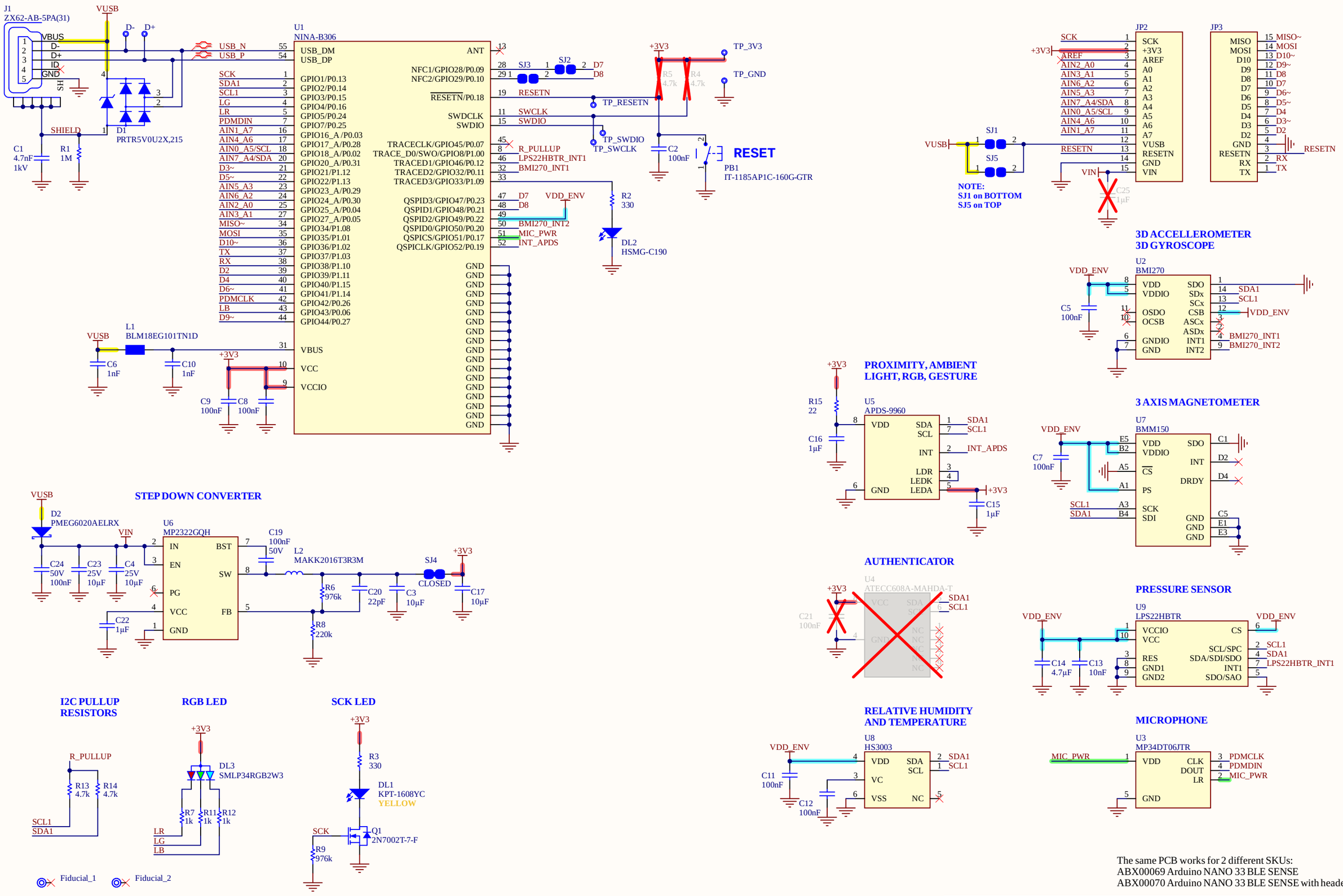

The same PCB works for 2 different SKUs:
ABX00069 Arduino NANO 33 BLE SENSE
ABX00070 Arduino NANO 33 BLE SENSE with headers

Reference Designs ARE PROVIDED "AS IS" AND "WITH ALL FAULTS. Arduino SA DISCLAIMS ALL OTHER WARRANTIES, EXPRESS OR IMPLIED, REGARDING PRODUCTS, INCLUDING BUT NOT LIMITED TO, ANY IMPLIED WARRANTIES OF MERCHANTABILITY OR FITNESS FOR A PARTICULA R PURPOSE.
Arduino SA may make changes to specifications and product descriptions at any time, without notice. The Customer must not rely on the absence or characteristics of any features or instructions marked "reserved" or "undefined".
Arduino SA reserves these for future definition and shall have no responsibility whatsoever for conflicts or incompatibilities arising from future changes to them. The product information on the Web Site or Materials is subject to change without notice.
Do not finalize a design with this info. ARDUINO and other Arduino brands and logos and Trademarks of Arduino SA. All Arduino SA Trademarks cannot be used without owner's formal permission.

Title: NANO33BLE SENSE			
ID: ABX00069/70	Revision: V6.2		
Date: 12/18/2023 Time: 3:32:29 PM	Sheet 1 of 1		
File: NANO33BLE_SENSE.SchDoc	Author: Arturo Guadalupi	RevAuthor: Silvio Navaretti	